metabo®

HC 333 Plus/2,80 DNB

0113033304 11

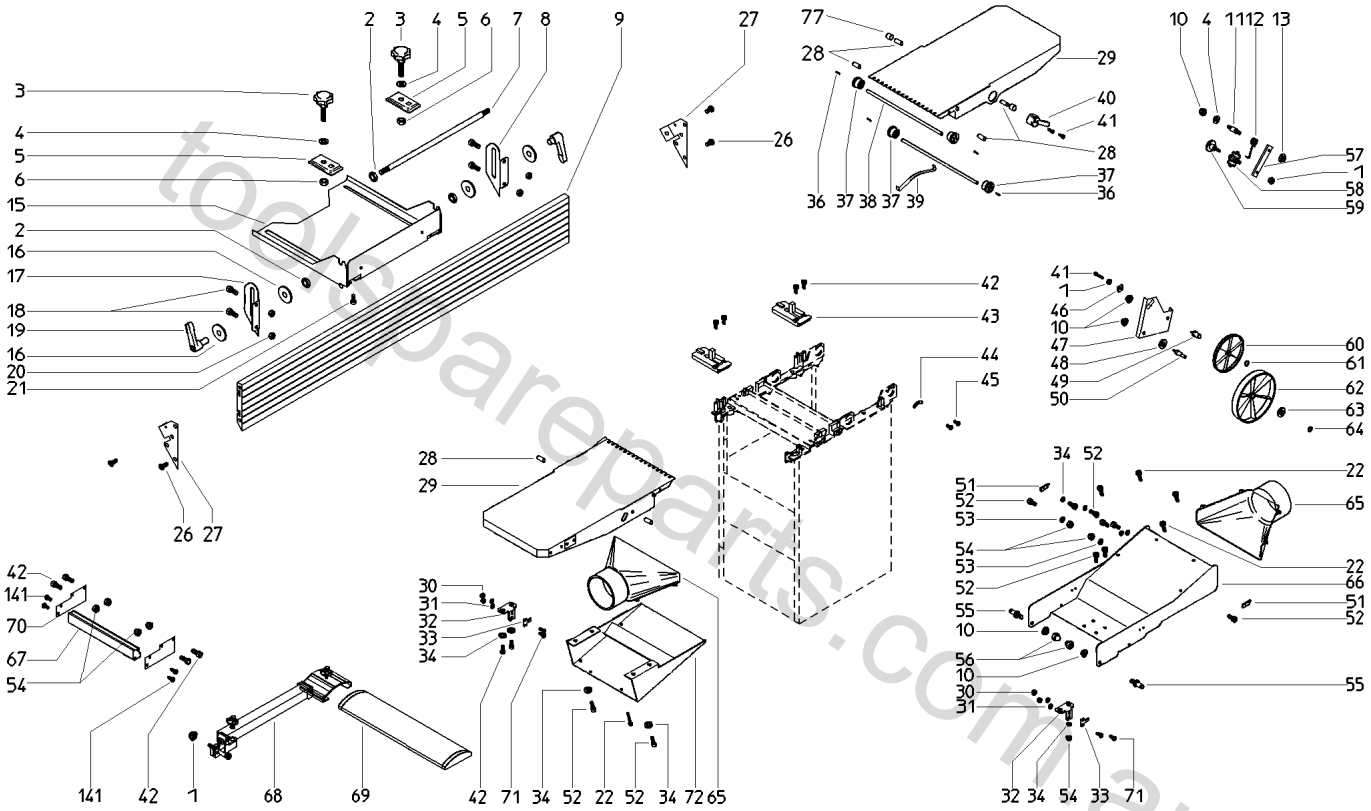

toolsspareparts.com.au

metabo®

HC 333 Plus/2,80 DNB

0113033304 11

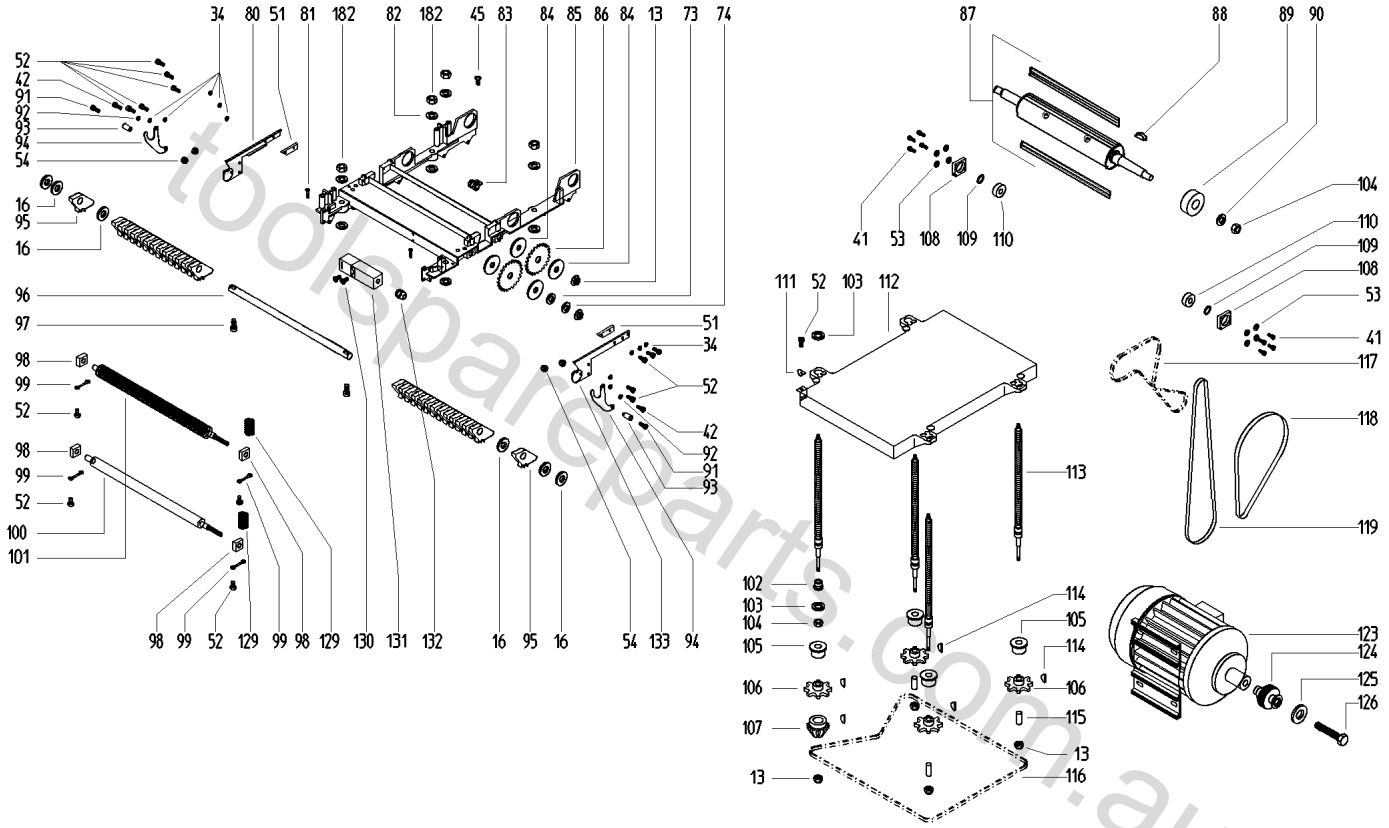

toolspareparts.com.au

HC 333 Plus/2,80 DNB

0113033304 11

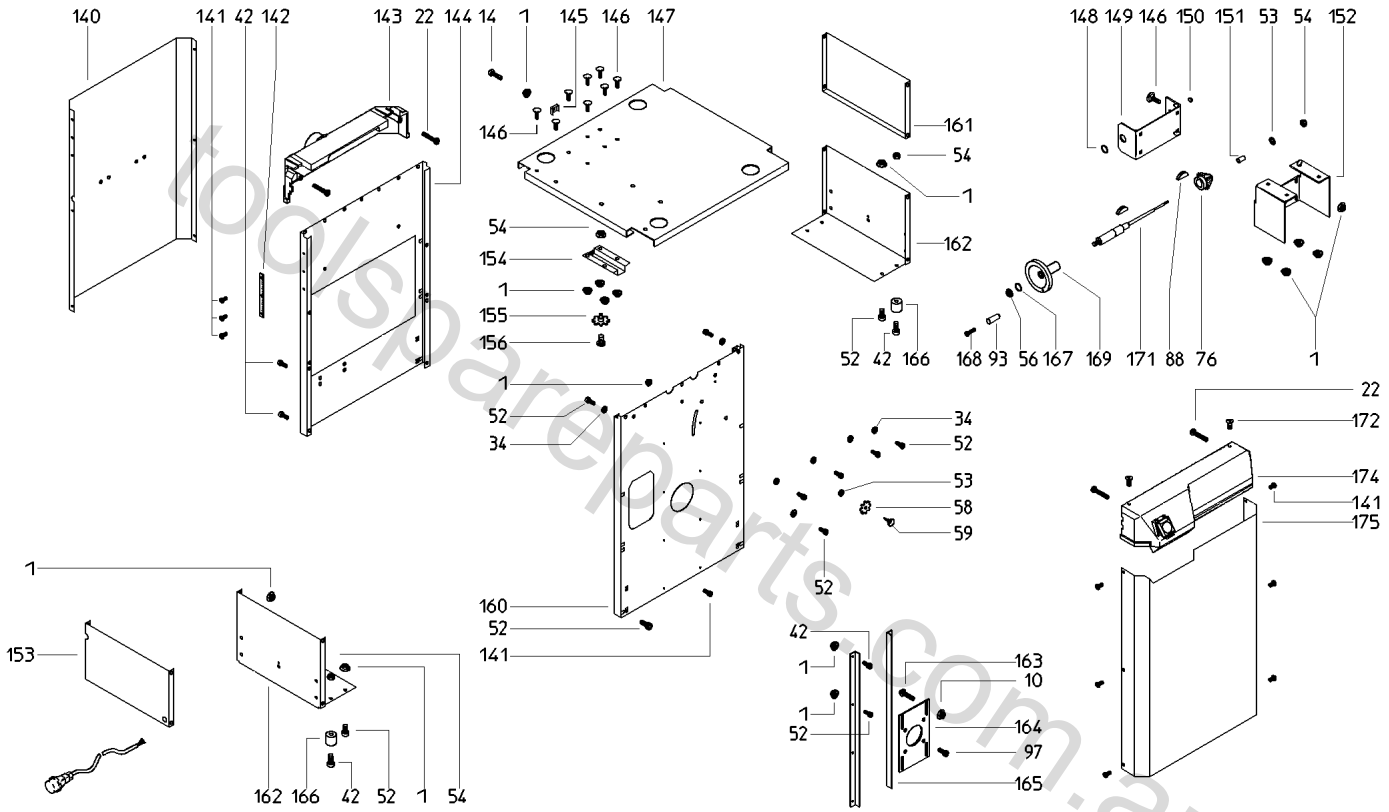

toolspareparts.com.au

metabo®

HC 333 Plus/2,80 DNB

0113033304 11

Position	Amount	Type number	Description	PG
1	48	6209114230	Flange nut	10
2	8	6205055744	HEXAGON THIN NUT M 12 VERZ. FORM B	10
3	2	7001144191	STARKNOB SCREW M 8X23 (DIN 933) VERZINKT	13
4	3	6305002486	Washer	10
5	2	1382651770	TENSION PLATE BL 2,99X88,0X44,0	17
6	2	7632149640	O-RING 5,23X2,62 70 SHORE	10
7	1	1485651990	GUIDE SHAFT RD 12X544,5	33
8	1	1482218837	ANGLE BRACKET BL 2,99X79,5X(158) HINTEN	20
9	1	1383651456	FENCE EXTRUSION 1100 MM	49
10	9	6209110995	Flange nut	10
11	1	1485652228	BOLT RD 16X40,5 M8	23
12	1	7051005753	TORSION SPRING	14
13	7	6202002305	HEXAGON NUT, PREV. TORQUE TYPE	10
14	1	6103001151	Hex head screw	10
15	1	1382651690	FENCE BASE PLATE BL 3,00X675,0X513,5	44
16	40	141150050	Washer	10
17	1	1482218829	ANGLE BRACKET BL 2,99X79,5X(158) VORNE	20
18	4	6103001178	Hex head screw	10
19	2	7006028653	RATCHET LOCK LEVER, FEMALE	19
20	4	141131020	Square nut	12
21	2	2391202772	GLIDE PIECE	10
22	16	6189011421	CROSS REC'D SAUCER-HEAD SCREW 5X20-Z VE	10
26	4	141122870	Self-tap. fill. h. screw	10
27	2	1382724166	COVER, FENCE EXTRUSION BL 2,99X85X144,5	22
28	6	6500009339	PARALLEL PIN 8 h8X45	10
29	2	1380649914	JOINTING TABLE 310X602	62
30	4	141130930	Hexagonal lock nut	10
31	4	141150010	Washer	10
32	2	1482652570	SWITCH PLATE BL 2,99X46X55	20
33	1	8118651937	SWITCH GERADE	33
34	36	141150130	Washer	10
36	4	6503001711	CLAMPING SLEEVE	10
37	4	1385652115	CAM PLATE RD44X20	31
38	2	1485652244	AXLE RD 12X366	30
39	1	7052651829	LEAF SPRING 1,5X15X189	22
40	1	1380649965	SETTING HANDLE	24
41	11	141113890	Cap screw	12
42	18	6121023081	Cap screw	10
43	2	1380650092	FENCE GUIDE	19
44	1	1142651870	SCALE 1,00 0-3 MM	13
45	3	6172047473	CROSS REC'D PAN HEAD TAP.SCREW ST 4,2X9,	10

toolspareparts.com.au

46	1	6264166657	CAGE NUT	10
47	1	1482652650	TRANSMISSION BASE PLATE BL 2,99X126X120	26
48	1	6305002508	WASHER B 13 VERZ.	10
49	1	1485652287	AXLE RD 20X45	24
50	1	1485652309	AXLE RD 20X75,5	30
51	4	1380650025	LOCKING STONE	16
52	73	141113840	Cap screw	12
53	12	141151940	Washer	10
54	18	6202002291	HEXAGON NUT, PREV. TORQUE TYPE	10
55	2	1485208581	BOLT	18
56	3	6201002131	CAP NUT M 8 VERZ.	10
57	1	1492020237	CHAIN TENSIONER FL 20X4X90	13
58	2	7246017292	CHAIN SPROCKET RD 30,5X6,5 Z=10 T=8	15
59	2	1395028584	THREADED BOLT RD 14X20 10h9 RUNDUMBESCHI	13
60	1	7247017342	GEARWHEEL Z=80/M=1,5 Z=15/T=8	21
61	1	141180060	RETAINING RING	10
62	1	7242653860	FLAT BELT PULLEY RDA 160XRDI 16/16,8 MIT	25
63	1	6306009760	SHIM RING 16X22X1 VERZ.	10
64	1	6400009900	RETAINING RING FOR SHAFTS 16X1	10
65	2	1381649977	DUST CHUTE	20
66	1	1011652731	SAW BLADE GUARD, PRE-ASSEMBLED OBEN	41
67	1	1383655036	PANEL, TABLE EXTENSION 320 MM	26
68	1	1011659558	CUTTERBLOCK GUARD 440 MM	57
69	1	1384219973	CUTTER GUARD, STANDARD 88X440	36
70	2	1382654761	BRACKET BL 2,99X54X134 HC333	23
71	4	141113200	Fillister head screw	10
72	1	1011652723	SAW BLADE GUARD, PRE-ASSEMBLED UNTEN	36
73	1	7053636050	CUP SPRING	17
74	1	1485660735	COUPLING DISC RD 28X8,2X4	17
76	1	1380218565	CONICAL GEAR WHEEL Z=16 M2,5 45GRAD RDI	17
77	2	6442084600	SPACER SLEEVE RD 12/9X3,5	13
80	1	1482652634	TABLE SUPPORT BL 2,99X73X230 LINKS	27
81	4	6132087995	Countersunk screw	10
82	8	6306661378	SHIM RING 12X18X1,2	10
83	1	8242656840	CABLE CLIP RD 9,5 BOHRUNG 5,2	10
84	4	1482652693	COUPLING DISC BL 2,99XRD49,8	13
85	1	1380649957	CUTTERBLOCK CARRIER	64
86	2	7246649990	CHAIN SPROCKET Z=28	13
87	1	1011656281	CUTTERBLOCK ASSEMBLY 310MM SCHNELLWECHSE	68
88	3	6720008538	WOODRUFF KEY	10
89	1	1385652085	POLY-RIB PULLEY 7JX37,5/RDA 37,5X20	29
90	1	6300019984	Washer	10

toolspareparts.com.au

91	2	141113940	Cap screw	10
92	2	7053081619	CUP SPRING	10
93	3	7004017433	TURNING TANG	14
94	2	1482652588	TABLE BOLT BL 2,99X74X98	19
95	28	1482652316	GRAP BL 8,00X36X46	23
96	1	1485652260	AXLE RD 10X339	28
97	6	6122151520	HEXAGON SOCKET HEAD CAP SCREW M 6X16 VER	12
98	4	1381650002	BEARING	12
99	4	1482652715	LOCKING PLATE BL 2,00X14X50	12
100	1	1385652123	INFEED ROLLER RDA 25X416 GUMMIERT	51
101	1	1485652147	INFEED ROLLER RDA 25X416 GERILLT	38
102	1	1485655294	SPACER SLEEVE RD 25/20/16,2X15	24
103	2	1381655268	WASHER RDA24XRDI16X3	14
104	2	6205088367	HEXAGON THIN NUT	10
105	4	1381649985	SPINDLE BEARING	12
106	4	7246651790	CHAIN SPROCKET RDA 32,4X15 RDI 10 Z=15 T	15
107	1	1380651803	CONICAL GEAR WHEEL Z=16 M=2,5 45GRAD RDI	17
108	2	1380650017	BEARING SEAT	25
109	2	7632123315	O-RING 42,5X2,5	10
110	2	7100016995	DEEP GROOVE BALL BEARING	22
111	1	1482652642	POINTER BL 2,00X22X25	15
112	1	1380649930	THICKNESSER BED 307X550	59
113	4	1485652201	THREADED SPINDLE RD16X316	38
114	5	6720008511	WOODRUFF KEY	10
115	3	6442158493	SPACER SLEEVE RD 13/10,5X22 VERZ.	12
116	1	7236651899	ROLLER CHAIN 246 GLIEDER 6 MM TEILUNG	35
117	1	7236651902	ROLLER CHAIN 98 GLIEDER 8 MM TEILUNG	27
118	1	7233652789	POLY-RIB BELT 7 PJ 955	27
119	1	7232652777	FLAT BELT 670X10X1,0	22
123	1	1010654064	ELECTRIC MOTOR 2,80 DNB 400V ET	64
124	1	1385652107	POLY-RIB PULLEY 7JX84,5/RDA 84,5X70 MOTO	39
125	1	6300016705	Washer	10
126	1	141122670	Hexagon head screw	16
129	4	7051652740	PRESSURE SPRING 2,5X15X32	12
130	2	141111420	Fillister head screw	12
131	1	8116651921	SAFETY SWITCH PG9/11-VERSCHRAUBUNG INCL.	42
132	1	8240656320	EXTENSION CLAW SCREW PG 9 X PG 11	15
133	1	1482652618	TABLE SUPPORT BL 2,99X73X230 RECHTS	27
140	1	1382652564	OUTER COVERING BL 1,50X579X711 BFS	37
141	26	6172015687	CROSS REC'D PAN HEAD TAP.SCREW	10
142	1	1142651862	SCALE 1,00X20X186 0-180 MM	20
143	1	1381650070	COVER BOHRFUTTERSEITE	25

toolspareparts.com.au

144	1	1382652416	SIDE PANEL BL 2,00X574X825 BFS	39
145	1	6264166657	CAGE NUT	10
146	12	6110000594	CUP SQUARE NECK SCREW	10
147	1	1382652432	BOTTOM PLATE BL 2,00X438X574	38
148	1	7637651440	SLIDE BUSHING RDI 16 (F.3MM BLECH)	14
149	1	1482652677	BEARING PLATE BL 2,99X66X181	21
150	1	7637651433	SLIDE BUSHING RDI 06 (F.3MM BLECH)	12
151	1	6442059304	SPACER SLEEVE	10
152	1	1382652335	BASE PLATE BL 2,99X155X240	28
153	1	1382652491	FRONT COVER PLATE BL 0,88X230X380 VORNE	27
154	1	1382652378	CHAIN TENSION PLATE BL 2,00X83X89	27
155	1	7246017365	CHAIN TENSIONING SPROCKET RD 32,4X95, Z=	15
156	1	1395017418	THREADED BOLT RD 13X20 8h9 M 6 RUNDUMBE	13
160	1	1382652394	SIDE PANEL BL 2,00X574X825 AS	39
161	1	1382652475	FRONT COVER PLATE BL 0,88X230X380 HINTEN	26
162	2	1382652459	FRONT COVER PLATE BL 2,00X380X409 UNTEN	33
163	4	6110000632	CUP SQUARE NECK SCREW M 8X16 VERZ.	10
164	1	1382652521	MOTOR PLATE BL 5,00X119X194	24
165	2	1382652351	ANGLE STRUT BL 2,99X50X542	22
166	4	7057208753	RUBBER FOOT RD 30X17,5 80 SHORE	12
167	1	7053075104	CUP SPRING	10
168	1	6121112564	HEXAGON SOCKET HEAD CAP SCREW	10
169	1	7003087322	HANDWHEEL	29
171	1	1485652180	SHAFT, HEIGHT ADJUSTMENT RD 16X188	30
172	2	6131059530	CROSS RECESSED FLAT HEAD SCREW	10
174	1	1011651530	SWITCH DNB 400/3/50	63
175	1	1382652548	OUTER COVERING BL 1,50X659X711 AS	39
182	4	6209675305	LOCKING NUT M12 GANZMETALL	10

toolsnoreparts.com.au

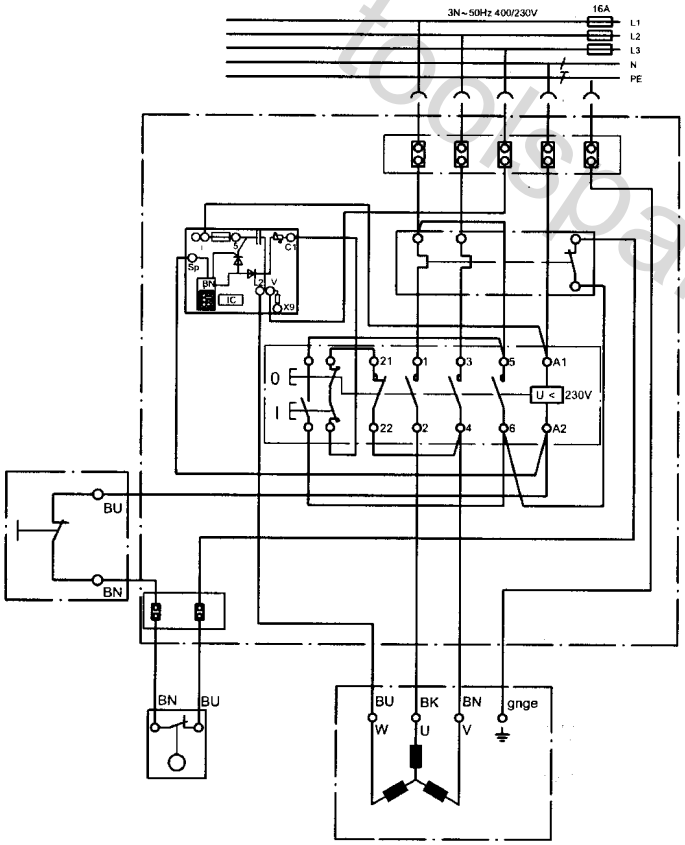

	Litzenfarben	Colour of strands	Couleur des cordons
BK	schwarz	black	noir
WH	weiß	white	blanc
BU	blau	blue	bleu
YE	gelb	yellow	jaune
RD	rot	red	rouge
TR	transparent	transparent	transparent
BN	braun	brown	brun
GY	grau	grey	gris
GNYE	grün-gelb	green-yellow	vert-jaune
BKWH	schwarz-weiß	black-white	noir-blanc
GN	grün	green	vert
OG	orange	orange	orange
VT	violett	violet	violet
TQ	türkis	turquoise	turquoise

	Bedeutung der Kurzzeichen	Meaning of the symbols	Interprétation des symboles
C	Kondensator	condenser	condensateur
D	Funkentstördrossel	interference suppression inductance	inductance d'antiparasitage
E	Elektronik-Baustein	electronic unit	unité électronique
I	Induktionsspule	induction coil	bobine d'inductance
K	Klemme	terminal	borne
L	Licht	light	lumière
M	Motor	motor	moteur
O	Überlastschutz	overload cut-out	déclencheur de surintensité
R	Drehrichtungsumschalter	reversing switch	commutateur droite-gauche
S	Schalter	switch	interrupteur
U	Umschalter	change-over switch	commutateur
X	Elektronik-Element	electronic element	élément électronique

toolspareparts.com.au